Inox Premier Filter Housing

PFH-SGB-12

SPECTRUM®
Technical Drawing

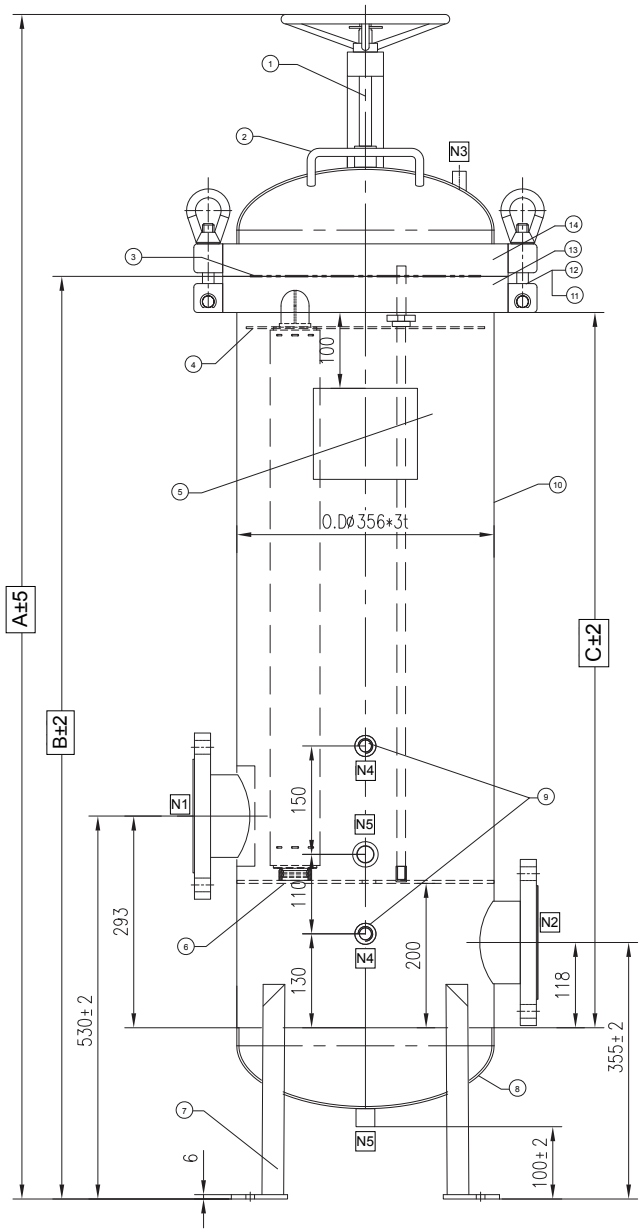

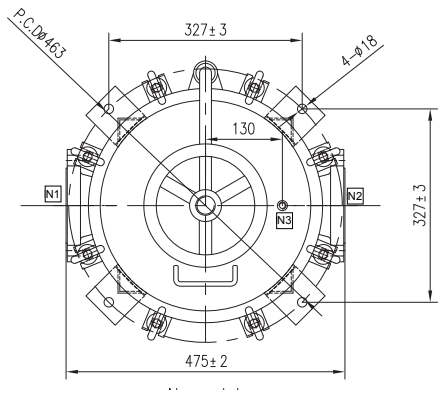

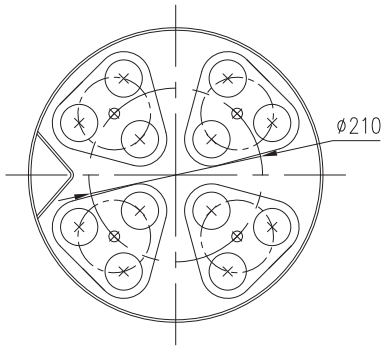

CARTRIDGE LAYOUT

Overall Dimensions			
To Accommodate Filter Qty x Length	A mm	B mm	C mm
12 x 30″	1640	1277	990
12 x 40″	1890	1537	1240

No.	Type	Size	No.	Type	Size
N1	Inlet	DN100 PN16 (4″ Flange)	N4	Gauge (x2)	1/4″ BSPT-F
N2	Outlet	DN100 PN16 (4″ Flange)	N5	Drain (x2)	1″ BSPT-F
N3	Vent	1/2″ BSPT-F	N6		

Components					
No.	Name	Material	No.	Name	Material
1	Davit Arm	304	9	Gauge Ports	316L
2	Handle	304	10	Cylinder	316L
3	O-Ring	BUNA-N	11	Snap Ring	304
4	Hold Down Plate	316L	12	Eye Nut & Bolt	304
5	Tie Rod	316L	13	Host Flange	316L
6	Tube Sheet	316L		Spring Assembly	Not Shown
7	Legs (x4)	304		V-Post	Not Shown
8	Body	316L			

Technical Information

- Pressure relief device should be installed on the outer piping by the customer to assure that pressure in the vessel can not exceed the design pressure indicated
- Vent, gauge and drain ports fitted with 316L PTFE taped plugs
- All dimensions are approximate in mm

Maximum Operating Temperature	**121°C**
Design Pressure	**10 bar**
Hydrostatic Test Pressure	**13 bar**