Inox Premier Filter Housing

PFH-SGB-21

SPECTRUM®
Technical Drawing

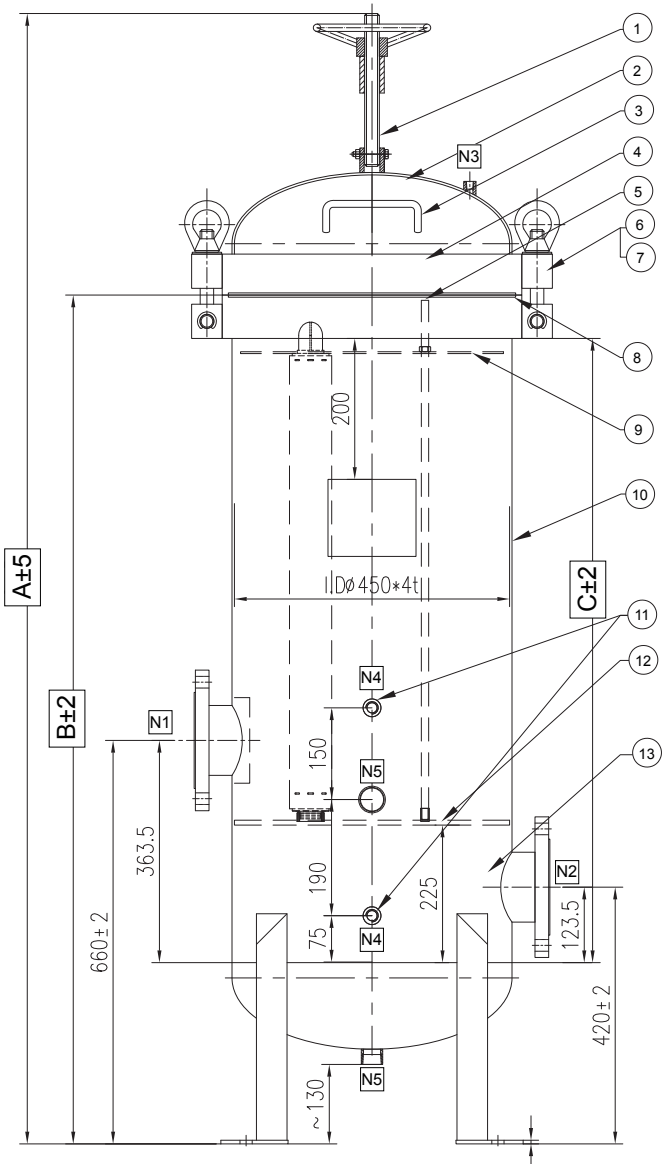

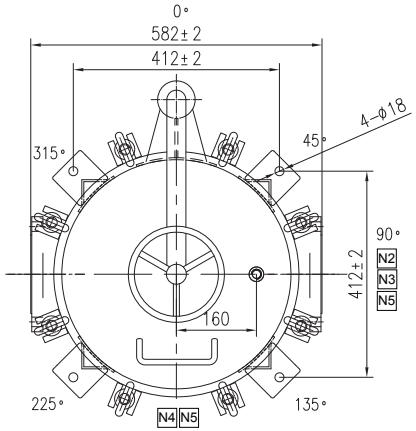

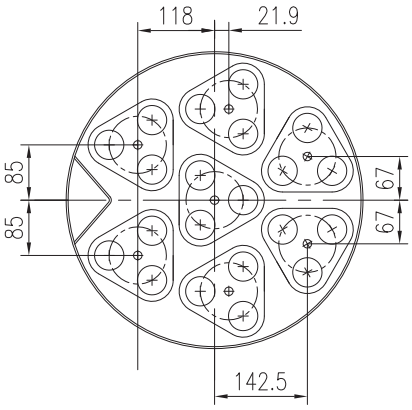

CARTRIDGE LAYOUT

Overall Dimensions			
To Accommodate Filter Qty x Length	A mm	B mm	C mm
21 x 30"	1833	1415	1056
21 x 40"	2087	1669	1310

No.	Type	Size	No.	Type	Size
N1	Inlet	DN100 PN16 (4" Flange)	N4	Gauge (x2)	1/4" BSPT-F
N2	Outlet	DN100 PN16 (4" Flange)	N5	Drain (x2)	1" BSPT-F
N3	Vent	1/2" BSPT-F	N6		

Components					
No.	Name	Material	No.	Name	Material
1	Davit Arm	304	9	Hold Down Plate	316L
2	Head	316L	10	Cylinder	316L
3	Handle	304	11	Gauge Ports	316L
4	Host Flange	316L	12	Tube Sheet	316L
5	Tie Rod	316L	13	Legs (x4)	304
6	Eye Nut & Bolt	304		V-Post	Not Shown
7	Snap Ring	304		Spring Assembly	Not Shown
8	O-Ring	BUNA-N			

Technical Information

- Pressure relief device should be installed on the outer piping by the customer to assure that pressure in the vessel can not exceed the design pressure indicated
- Vent, gauge and drain ports fitted with 316L PTFE taped plugs
- All dimensions are approximate in mm

Maximum Operating Temperature	**121°C**
Design Pressure	**10 bar**
Hydrostatic Test Pressure	**13 bar**