Inox Premier Filter Housing

PFH-SGB-7

SPECTRUM®
Technical Drawing

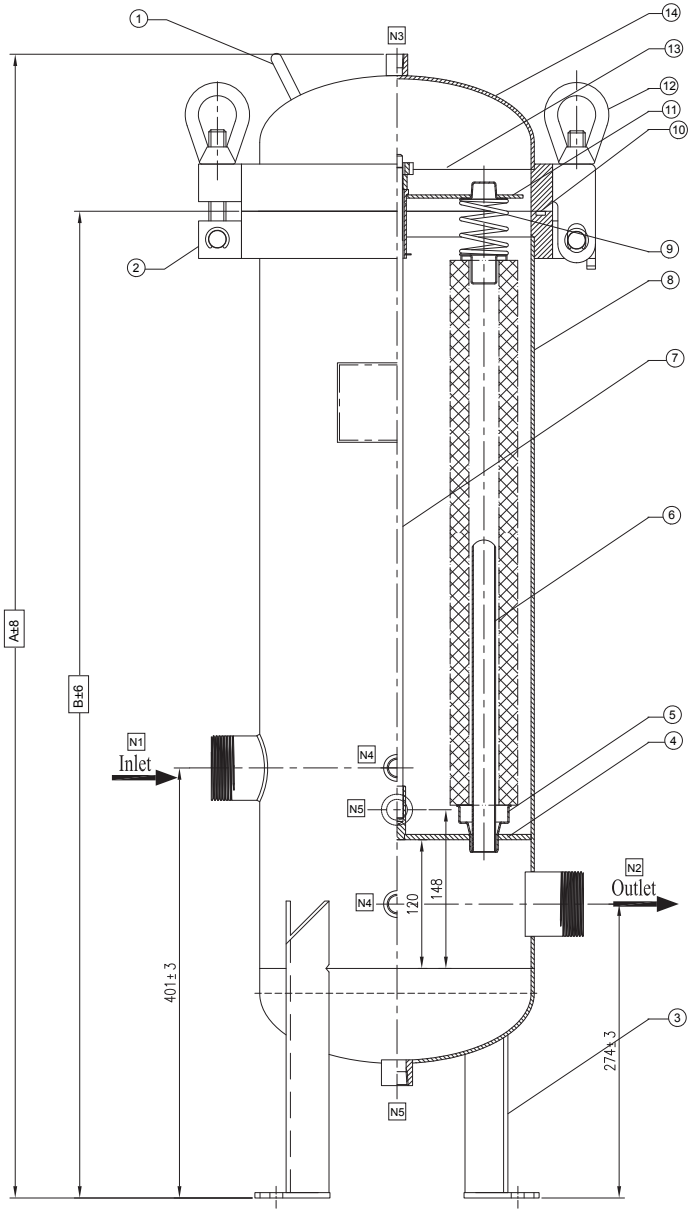

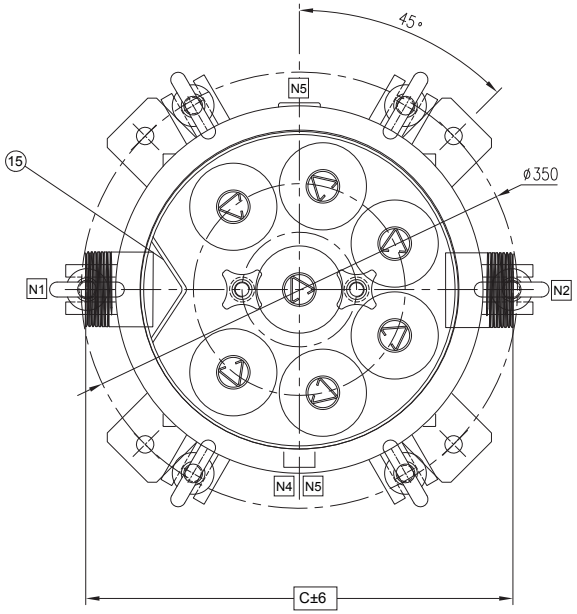

Overall Dimensions			
Product Code	A mm	B mm	C mm
PFH-SGB-7-30-2-G	1320	1174	343
PFH-SGB-7-40-2-G	1574	1428	343

Port Details					
No.	Type	Size	No.	Type	Size
N1	Inlet	2" BSPT-M	N4	Gauge (x2)	1/4" BSPT-F
N2	Outlet	2" BSPT-M	N5	Drain (x2)	1/2" BSPT-F
N3	Vent	1/4" BSPT-F			

Components					
No.	Name	Material	No.	Name	Material
1	Handle	304	9	Spring Assembly	316L
2	Hanging Ear Piece	304	10	O-Ring	BUNA-N
3	Legs (x4)	304	11	Hold Down Plate(x2)	316L
4	Tube Sheet	316L	12	Eye Bolt & Nut	304
5	Cartridge Seat	316L	13	Host Flange	316L
6	V Post (x7)	316L	14	Head	316L
7	Tie Rod	316L	15	Buffer	316L
8	Body	316L			

Technical Information

- Pressure relief device should be installed on the outer piping by the customer to assure that pressure in the vessel can not exceed the design pressure indicated
- Vent, gauge and drain ports fitted with 316L PTFE taped plugs
- All dimensions are approximate in mm

Maximum Operating Temperature	**121°C**
Design Pressure	**10 bar**
Hydrostatic Test Pressure	**13 bar**